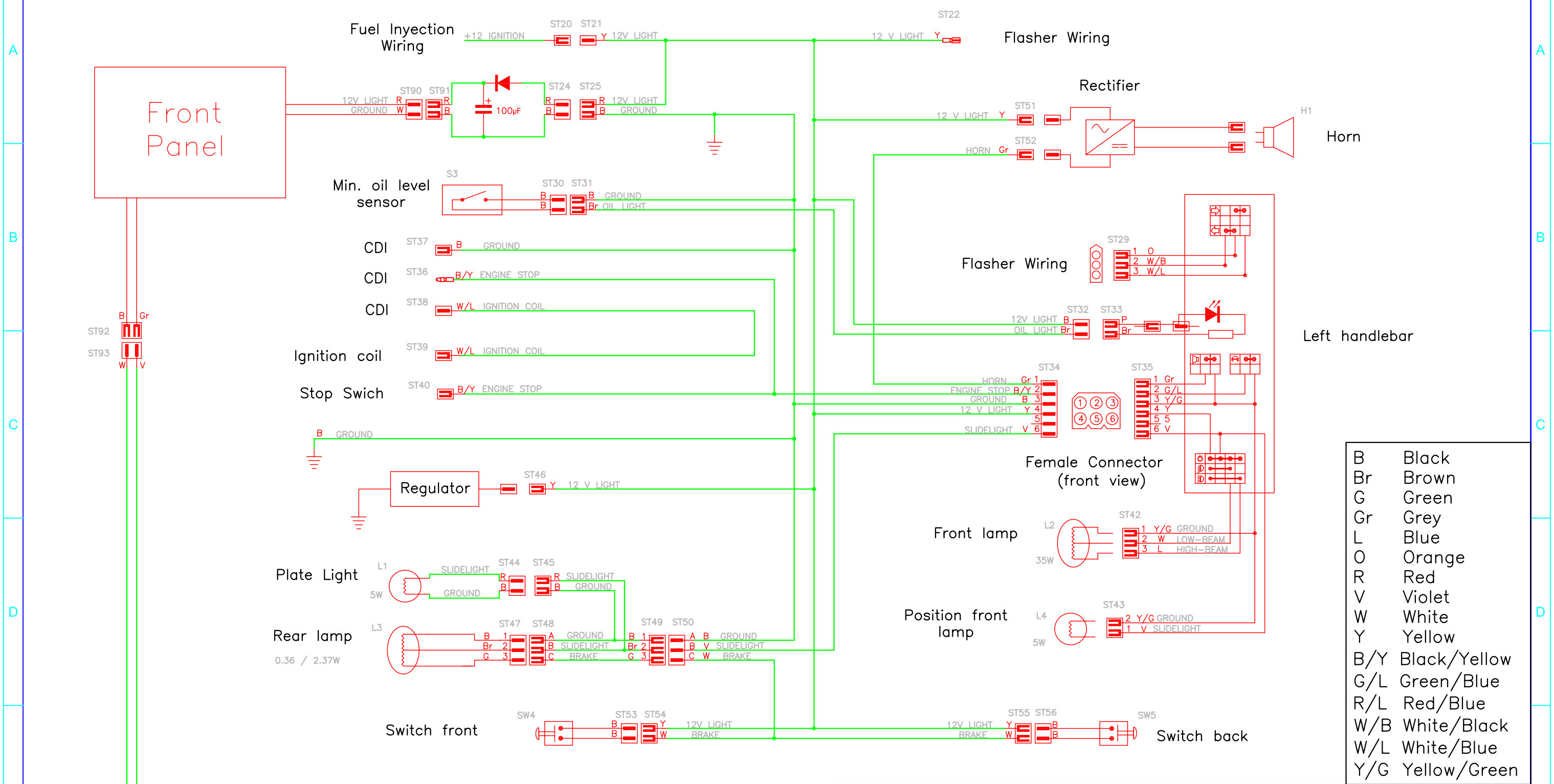

B	Black
Br	Brown
G	Green
Gr	Grey
L	Blue
O	Orange
R	Red
V	Violet
W	White
Y	Yellow
B/Y	Black/Yellow
G/L	Green/Blue
R/L	Red/Blue
W/B	White/Black
W/L	White/Blue
Y/G	Yellow/Green

Mod.	Description of the modification	Date modif.	Name	Checked

Edit:

Ref: EE-10000-2509

Title: Enduro Lights Wiring Diagram
Esquema Instal·lació Llums Enduro 2T

Material:	Heat Treatment:		Hardness:
Raw material:	Sup.Treatment:		Sup.Hardness:
Dimensions in gross:	Finished in General: Ra1.6	Tensile Strenght:	General Tolerance: ISO 2768-fH

DESIGN	I.Planas	30/04/2008	Scale: 1:1
PROJECT	B.Geebelen		
R&D			Format: A3
PROD.ENG	T.Garrido	2008.05.08 19:52:52 +02'00'	

This plane belongs to the property indicated to the stamp being prohibited its reproduction, gives to third,like any type of Registry of the Industrial Property and all use no authorized by the property. The property will exert the legal actions that considers opportune against that they do not respect this prohibition.